Removal

1. Loosen the wheel nuts slightly.
   Raise the vehicle, and make sure it is securely supported.
2. Remove the front wheel and tire (A) from the front hub.

Tightening torque :
107.9 - 127.5 N.m (11.0 - 13.0 kgf.m, 79.6 - 94.0 lb-ft)

NOTICE

Be careful not to damage the hub bolts when removing the front wheel and tire (A).

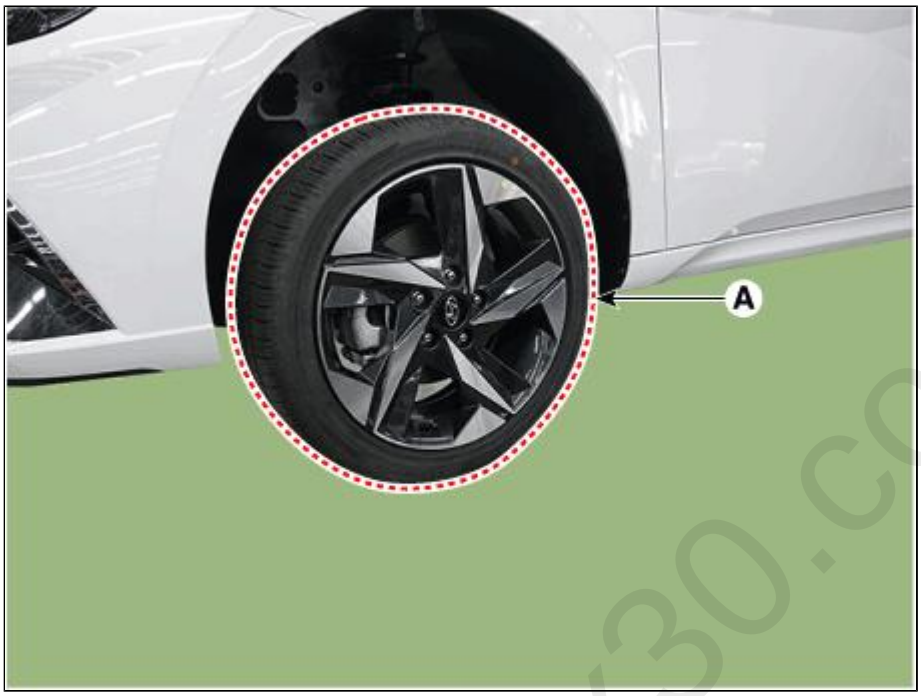

3. Remove stabilizer bar link from the front strut after loosening the mounting nut.

Tightening torque :
98.1 - 117.7 N.m (10.0 - 12.0 kgf.m, 72.3 - 86.8 lb-ft)

NOTICE

When loosening the nut fix the outer hexagon of stabilizer bar link.
Be careful not to damage the stabilizer link boots.

mcx30.com

4. Remove the tie rod end ball joint by using the special service tool.
   (1) Remove the split pin and castle nut (A).
   (2) Remove the tie rod end ball joint (B) by using the SST (09568-1S100).

Tightening torque :
34.3 - 39.2 N.m (3.5 - 4.5 kgf.m, 25.3 - 28.9 lb-ft)

NOTICE

Do not resuse castle nut.

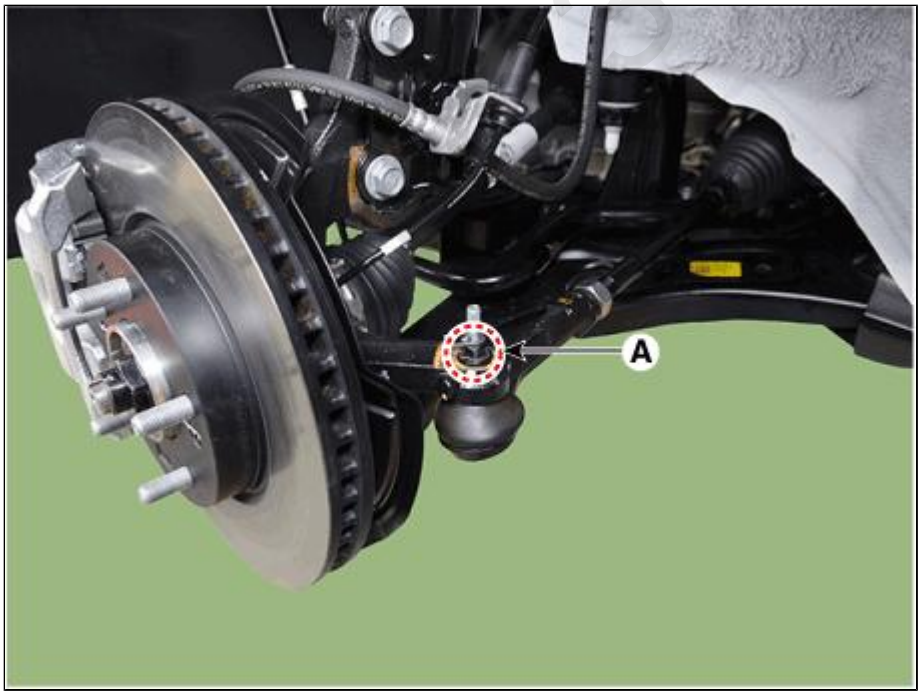

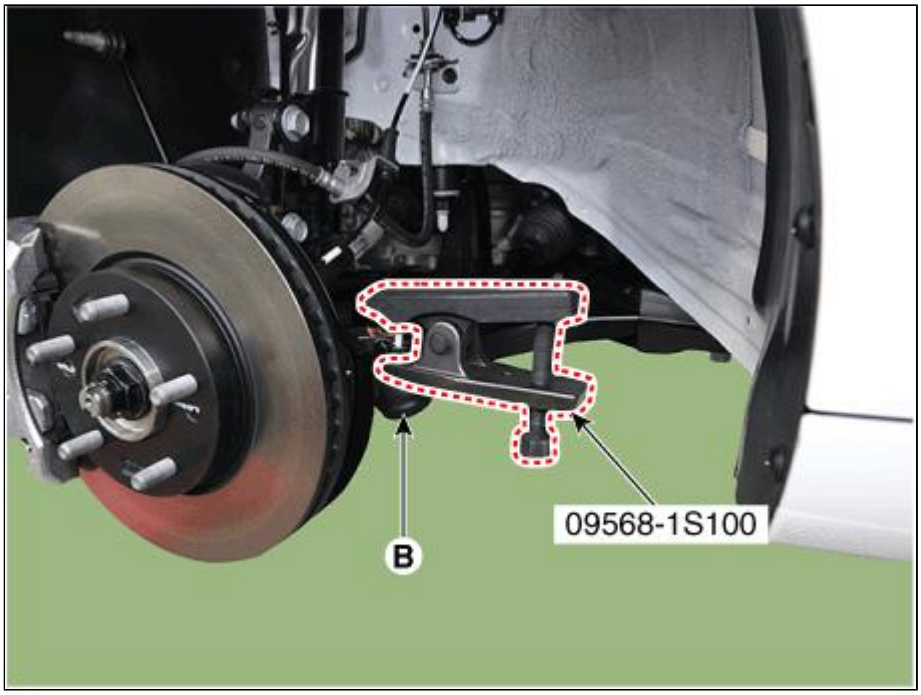

5. Separate the lower arm ball joint by using the SST (09568-1S100) after loosening the lower arm mounting nut (A).

Tightening torque :
68.6 - 80.4 N.m (7.0 - 8.2 kgf.m, 50.6 - 59.3 lb-ft)

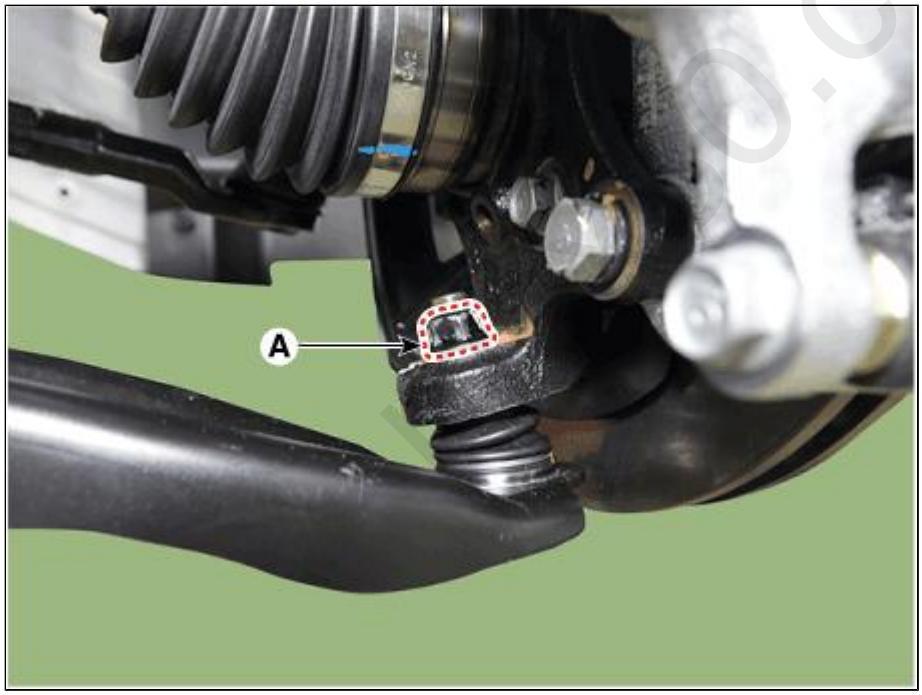

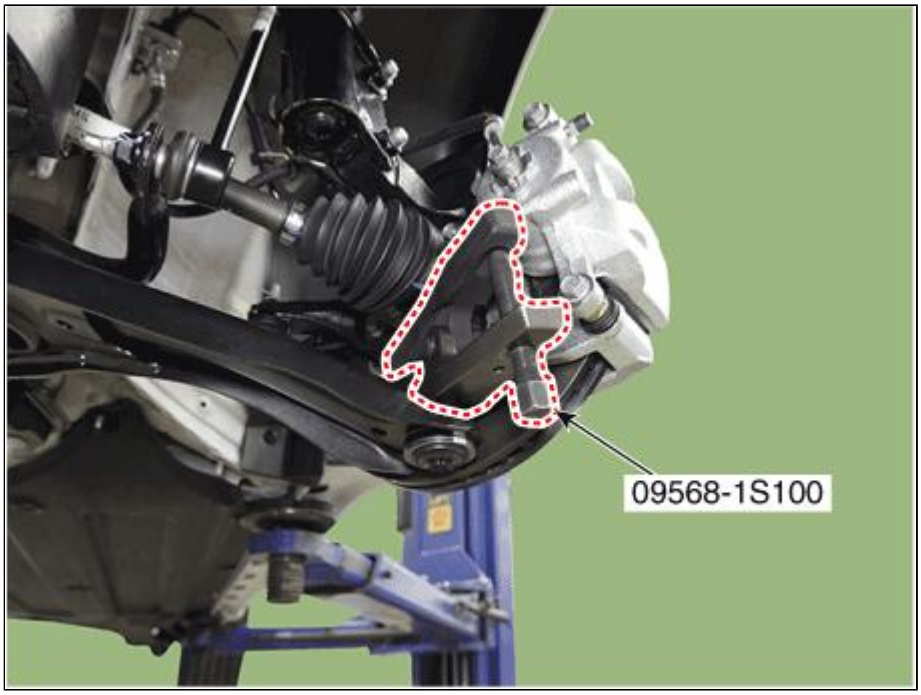

NOTICE

Do not reuse the lower arm ball joint nut (A).

6. Separate the universal joint from the steering gear box after loosening the universal joint mounting bolt.

Tightening torque :
49.0 - 58.8 N.m (5.0 - 6.0 kgf.m, 36.2 - 43.4 lb-ft)

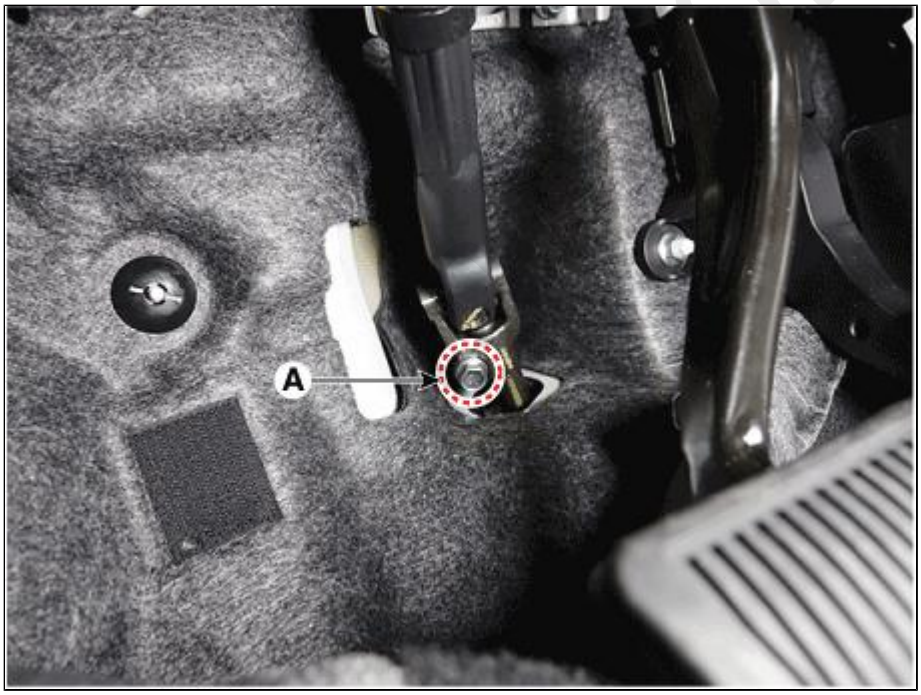

NOTICE

Lock the steering wheel in the straight ahead position to prevent the damage of the clock spring inner cable.
When mounting, securely insert the universal joint into the steering gear box pinion shaft.
Do not reuse the universal joint bolt.
Assemble so that pinion shaft shark pin can be inserted between the joint slots.
Install by aligning the machining surface (A) of the universal joint and the machining surface (B) of the steering gearbox pinion shaft.

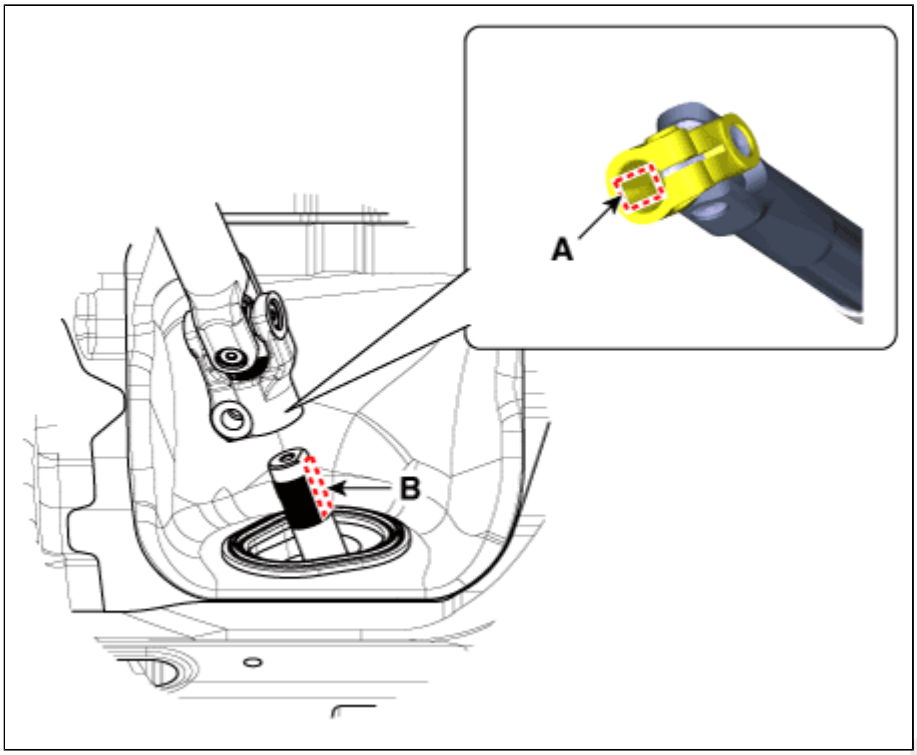

7. Remove the engine room under cover.
   (Refer to Engine Mechanical System - "Engine Room Under Cover")
8. Remove the heat protector (A).

Tightening torque :
8.8 - 12.7 N.m (0.9 - 1.3 kgf.m, 6.5 - 9.4 lb-ft)

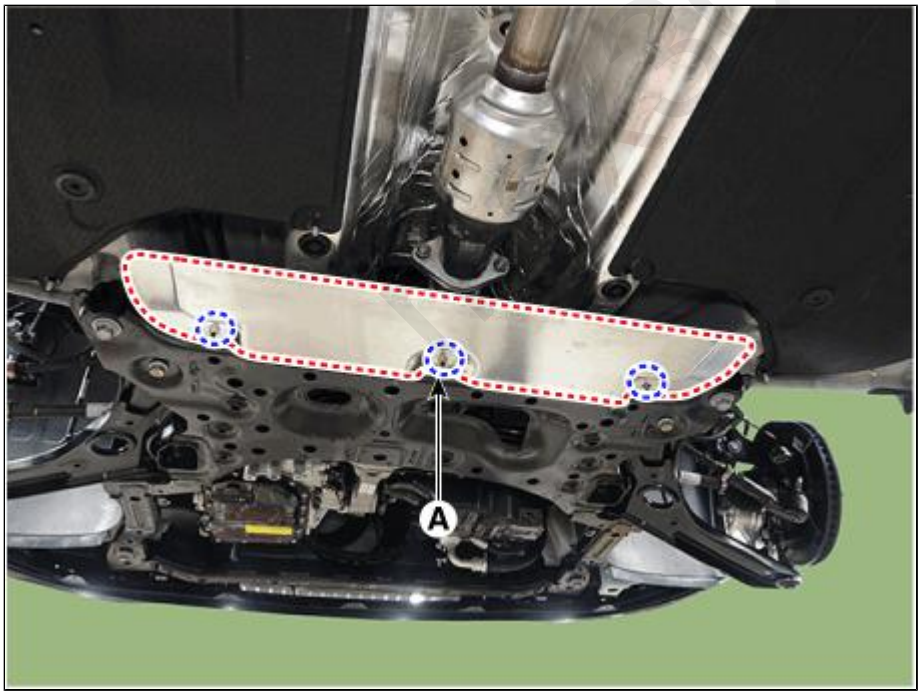

9. Remove the muffler rubber hanger (A).

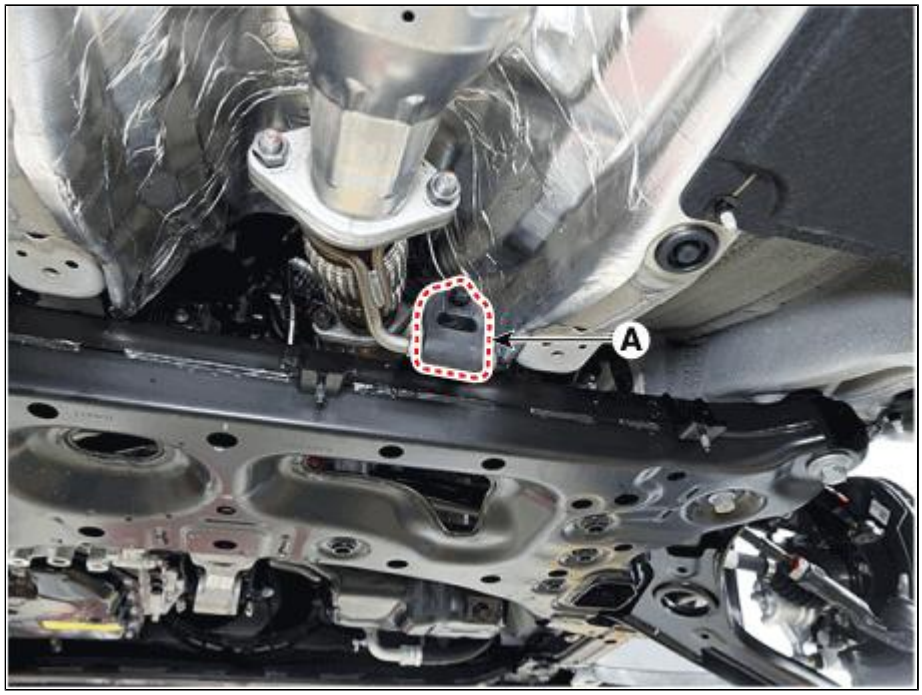

10. Remove the roll rod bracket (C) after loosening the mounting bolts (A, B).

Tightening torque
(A) : 107.9 - 127.5 N.m (11.0 - 13.0 kgf.m, 79.6 - 94.0 lb-ft)
(B) : 49.0 - 63.7 N.m (5.0 - 6.5 kgf.m, 36.2 - 47.0 lb-ft)

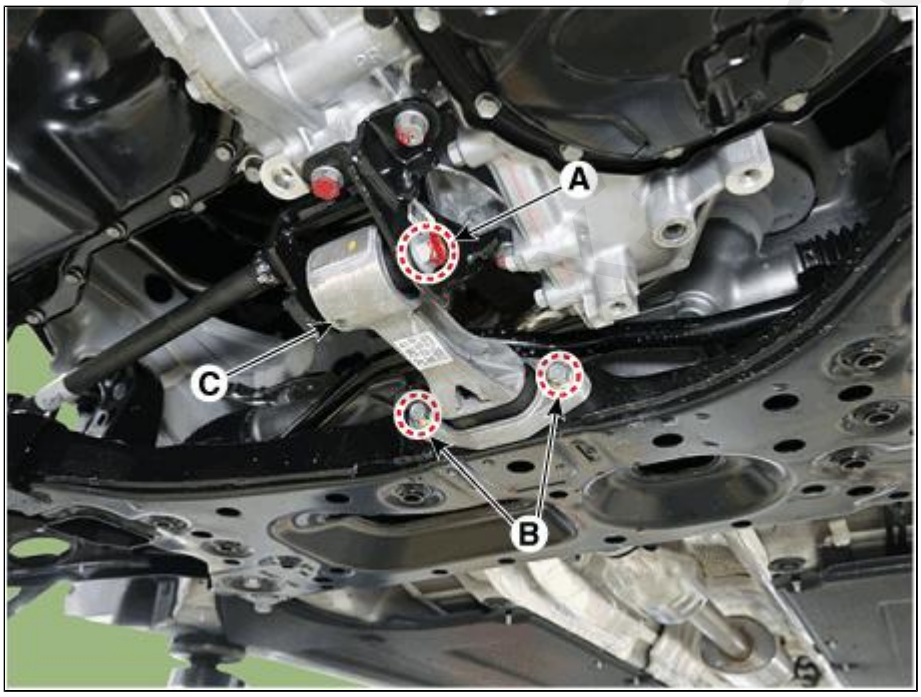

11. Remove the fastener (A).

[LH]

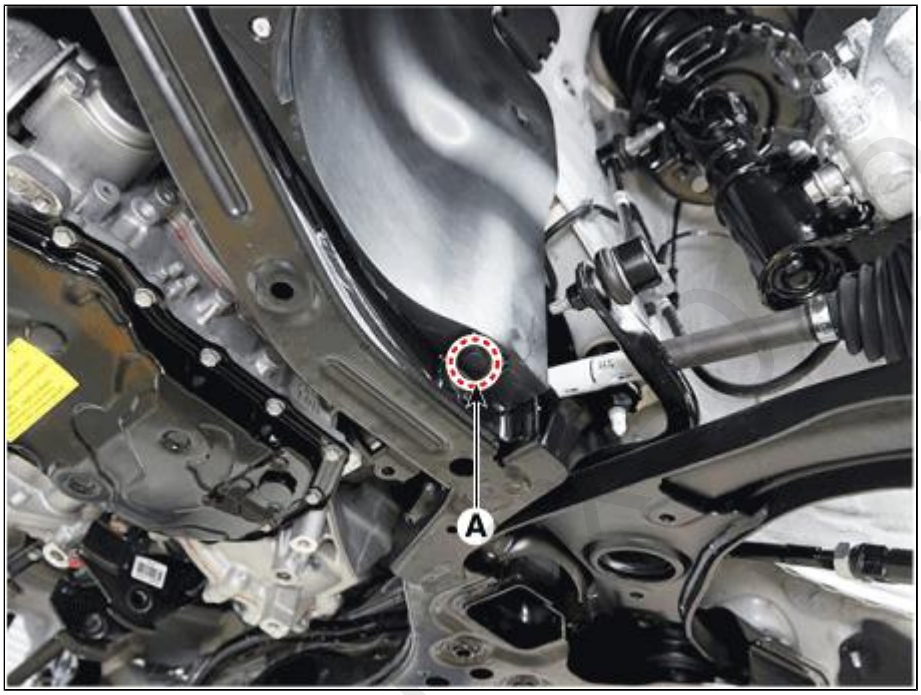

[RH]

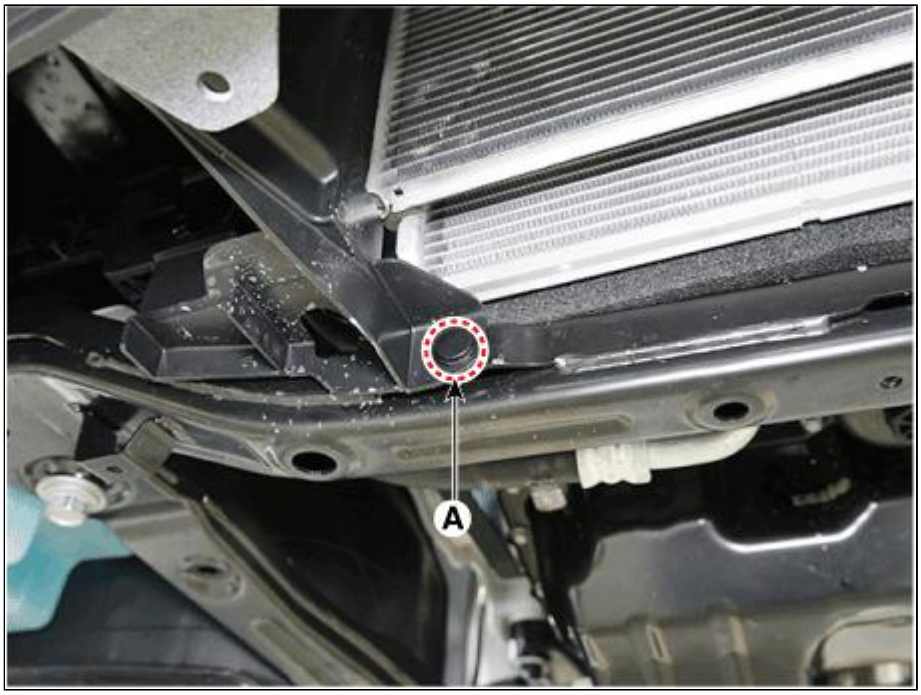

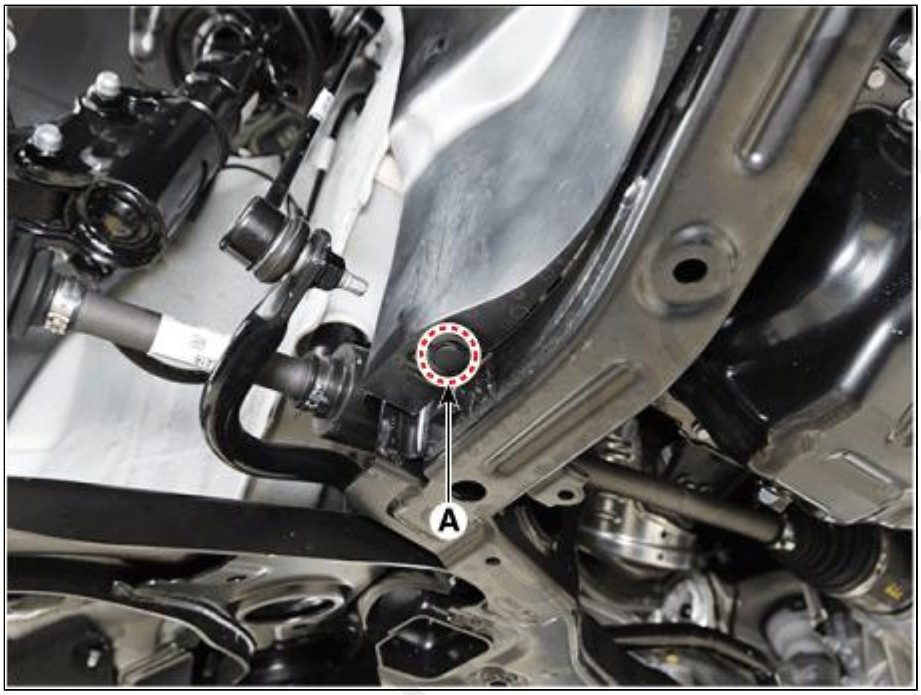

12. Remove the sub frame after loosening the mounting bolts and nuts.

Tightening torque :
176.5 - 196.1 N.m (18.0 - 20.0 kgf.m, 130.2 - 144.7 b-ft)

CAUTION

Set a transmission jack for safety.

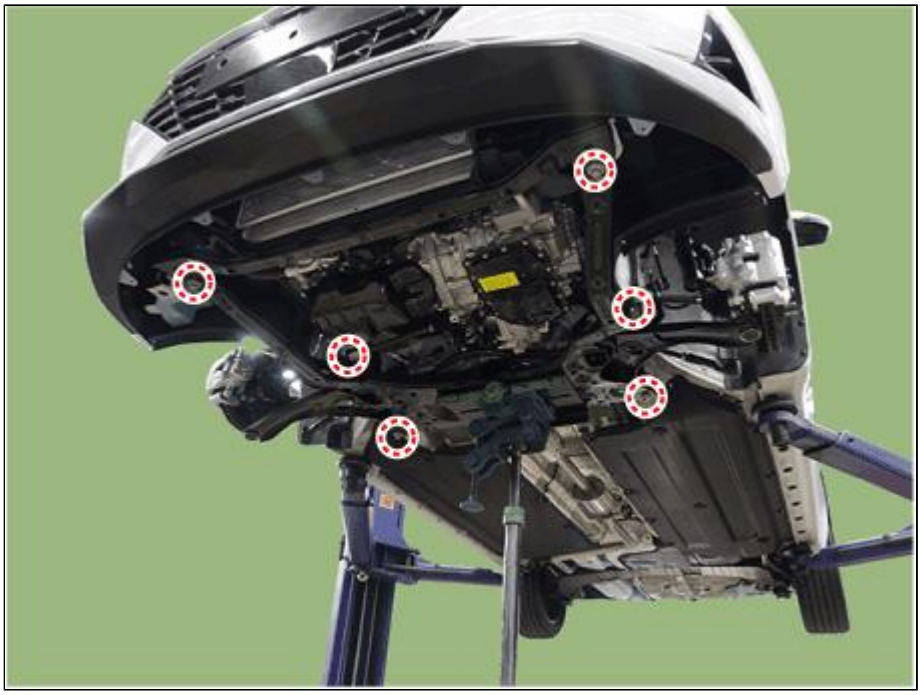

13. Remove the heat protector (A).

Tightening torque :
6.9 - 10.8 N.m (0.7 - 1.1 kgf.m, 5.1 - 8.0 lb-ft)

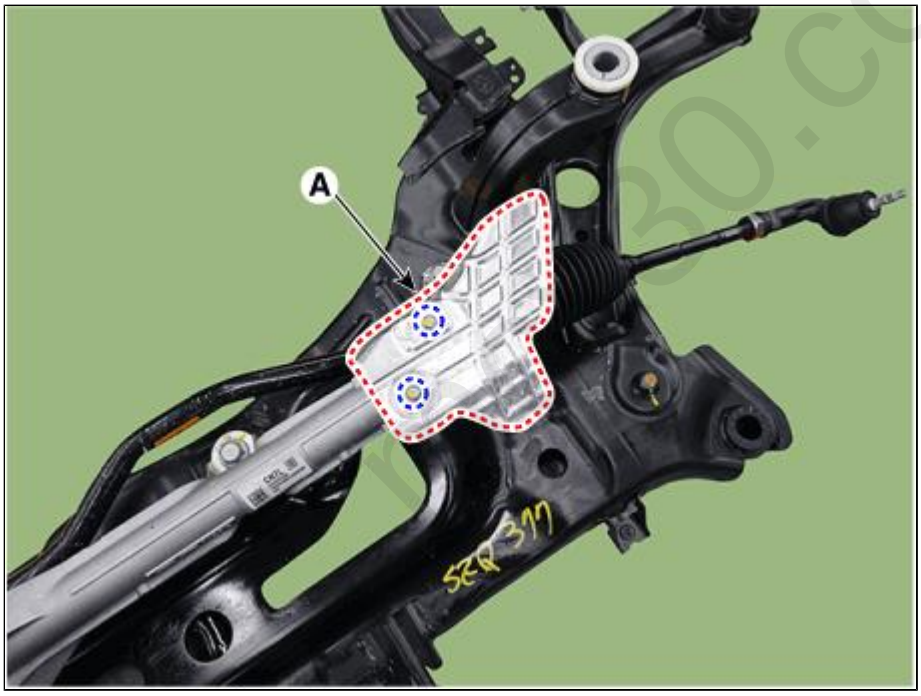

m30.com

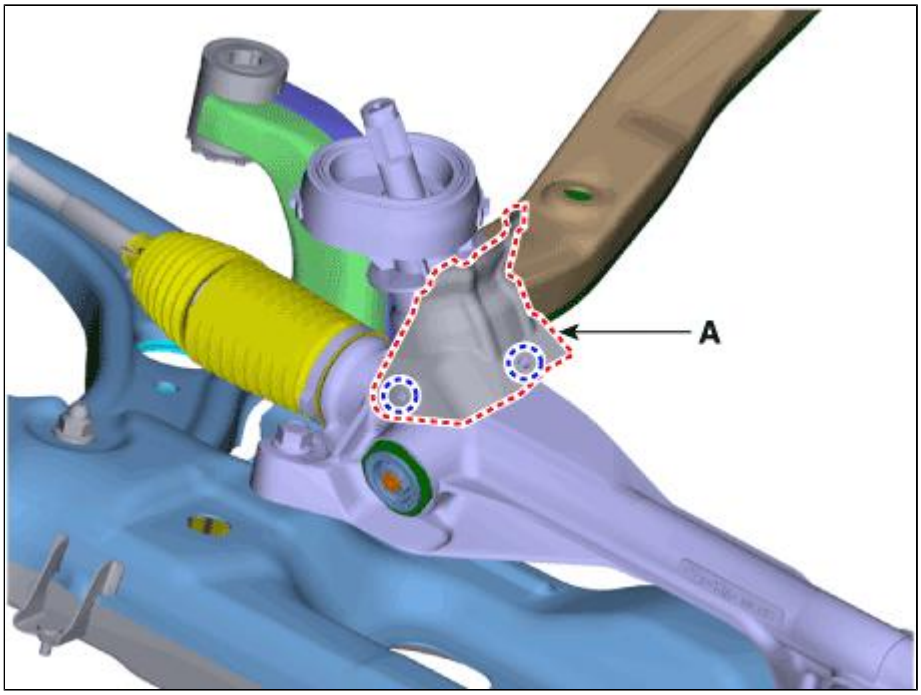

14. Remove the steering gear box (A) from the sub frame after loosening the mounting bolts.

Tightening torque :
107.9 - 127.5 N.m (11.0 - 13.0 kgf.m, 79.6 - 94.0 lb-ft)

15. Remove the stabilizer bar (A) from the sub frame after loosening the mounting bolts.

Tightening torque :
44.1 - 53.9 N.m (4.5 - 5.5 kgf.m, 32.5 - 39.8 lb-ft)

acx30.com

16. Remove the stabilizer bar link from the stabilizer bar after loosening the mounting nuts.

> **NOTICE**
>
> When loosening the nut fix the outer hexagon of stabilizer bar link.
> Be careful not to damage the stabilizer link boots.

Tightening torque :
98.1 - 117.7 N.m (10.0 - 12.0 kgf.m, 72.3 - 86.8 lb-ft)

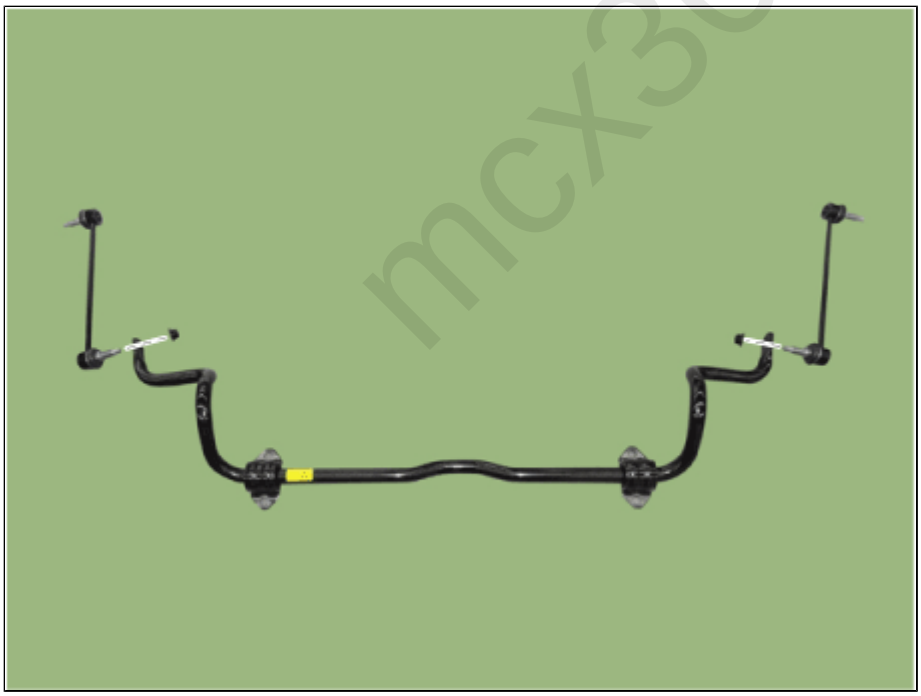

17. Remove the stabilizer bar bushing.

mcx30.com

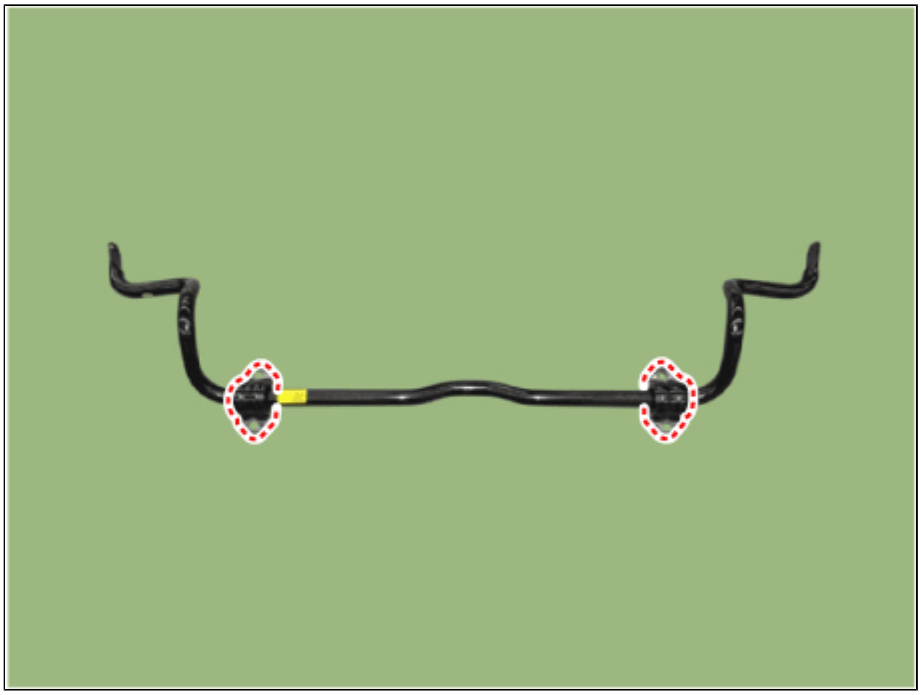

Installation

1. To install, reverse the removal procedures.
2. Check the alignment.
   (Refer to Suspension System - "Alingment")

Rate this Document

- Document Type : SHOP
- Document Rating :

Please rate the above contents on a scale of 1 to 5.

Little Value 1 2 3 4 5 Excellent Value

mcx30.com